INSTRUCTION MANUAL

MOUNTAIN SAFETY RESEARCH®

WINDBURNER® DUO & GROUP STOVE SYSTEMS INSTRUCTIONS

Retain these instructions for future reference.

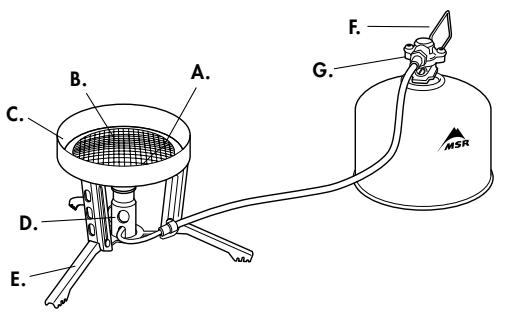

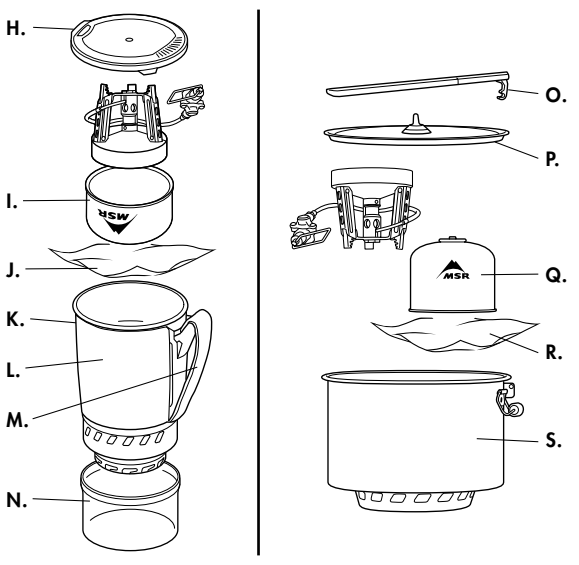

1

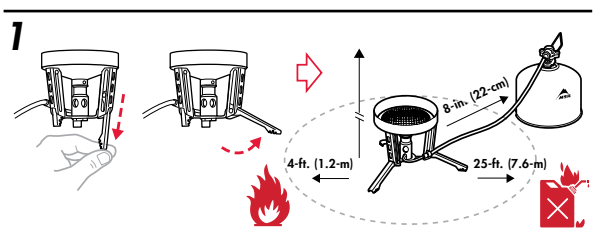

2

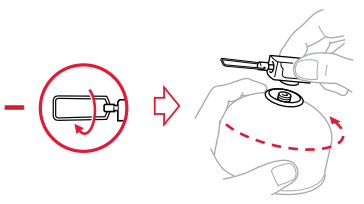

3

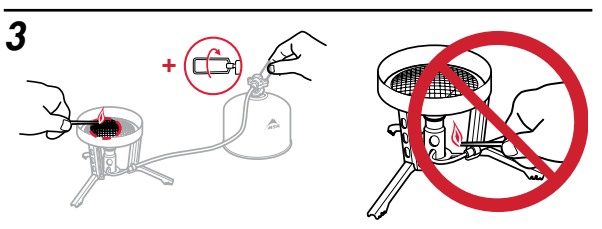

4

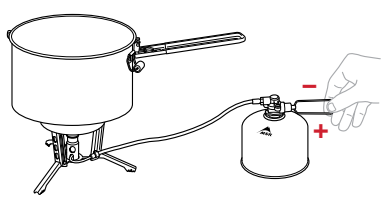

5

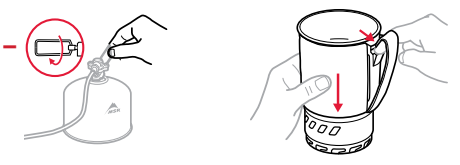

6

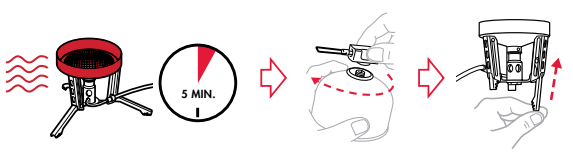

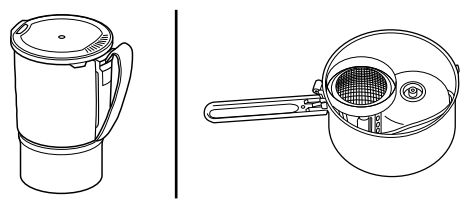

Intertek

0051

Nominal Heat Input Rate:

2.1 kW
162 g/H

Stove Orifice Size: 0.30 mm

NOTE: Nominal Heat Input Rate varies depending on test procedures of the particular standards agency.

MOUNTAIN SAFETY RESEARCH®

©2020 Cascade Designs, Inc., 4000 First Avenue South, Seattle, WA 98134 USA
Cascade Designs, Inc., USA - 1-800-531-9531 or 206-505-9500
Cascade Designs, Ltd., Ireland - (+353) 21-4621400
www.msrgear.com | info@cascadedesigns.com

⚠ DANGER

FOR OUTDOOR USE ONLY

CARBON MONOXIDE HAZARD

This stove can produce carbon monoxide, which has no odor. Using it in an enclosed space can kill you.

Never use this stove in an enclosed space such as a camper, tent, vestibule, car, or home.

FIRE OR EXPLOSION HAZARD

If you smell gas:

1. **Do not attempt to light appliance.**
2. **Extinguish any open flame.**
3. **Disconnect from fuel supply.**
4. **Evacuate immediately.**
5. **Allow gas to dissipate 5 minutes before relighting the appliance.**

Failure to follow these instructions could result in fire or explosion, which could cause property damage, personal injury or death.

FOR YOUR SAFETY

Do not store or use gasoline or other flammable vapors and liquids in the vicinity of this or any other appliance.

CARBON MONOXIDE, FIRE, EXPLOSION HAZARD

There are serious hazards associated with using this stove and fuel. Accidental fire, explosion, and misuse can cause death, serious burns, and property damage. You are responsible for your own safety and the safety of those in your group. Please use good judgment and read these instructions for use carefully. Familiarize yourself with the stove before connecting it to its gas container. Keep these instructions for future reference.

⚠ DANGER This stove is a lightweight, compact device made for OUTDOOR USE ONLY to boil water or cook food. Never use it for any other purpose. Use of stove within any enclosure, or for a purpose other than boiling water or cooking food can cause fire, burns, severe injury or death. Cooking outdoors is more hazardous than cooking as you normally would at home. Please consult with your local outdoor retailer to learn more about cooking outdoors. Seek qualified instruction before you venture outdoors. This stove uses a liquid pressurized gas (LPG) container that is highly flammable and explosive. This stove shall only be used with an 80% isobutane / 20% propane gas cartridge certified to EN 417. It may be hazardous to attempt to fit other types of gas containers. Follow this safety information:

- Check that the seals between the stove and the gas container are in place and in good condition before connecting the stove to the cylinder. Do not use this stove if it has damaged or worn seals.
- Gas containers must be changed in a well ventilated location outside and away from any sources of ignition, such as naked flames, pilot lights, electric fires and away from other people.
- Listen and smell for leaking gas. Leaking gas is a serious hazard. LPG is invisible and odorless, and strong odorant additives can fade over time. Leaks are not always detectable by smell. Do not use this stove if it is leaking, damaged, or does not operate properly.
- Check that the stove and fuel container connection is secure and tight. If the connection does not look or feel secure, or if you hear or smell leaking gas and cannot stop the flow of gas, do not use stove or fuel container. Move it to a well-ventilated area away from any ignition source to locate and stop the leak.
- Check for leaks using soapy water. Do not try to detect leaks using a flame. Use of a leaking stove can cause fire, burns, severe injury or death.
- Never use fuel containers larger than 16 ounces (450 grams).
- Keep stove and fuel container away from other heat sources. Never use any kind of windscreen. If you expose the fuel container to high heat, it will explode or leak and you can be killed or seriously burned.
- Follow all warnings on fuel container regarding use and storage. Canister can be checked for remaining fuel by assembling and attempting to light stove.
- Do not store or use gasoline or other liquids with flammable vapors in the vicinity of this or any other stove.
- Do not disassemble stove beyond what is described in these instructions. DO NOT MODIFY THIS STOVE. Disassembly or modification of stove in any manner not consistent with these instructions voids warranty and can result in an unsafe situation where fire, burns, severe injury or death can occur. No user-serviceable parts.
- Do not use stove if parts are missing or broken, or with replacement parts not specific to your stove model. Use of stove with missing or broken parts, or with replacement parts not specific to your stove model, can result in an unsafe situation where fire, burns, severe injury or death can occur.

To mitigate any dangers associated with stove use: (1) use stove only with WindBurner cookware, (2) never leave the stove unattended, (3) keep children and pets far away from stove, (4) always use stove on a solid, stable and even surface, and (5) never use stove in a manner inconsistent with these instructions or contrary to its intended use. Tipping of the WindBurner stove system can result in an unsafe situation where fire, burns, severe injury or death can occur.

⚠ DANGER Do not use this stove: (1) before reading and fully understanding this Instruction Manual; (2) if you are not prepared or comfortable attending to a burning and/or hot stove at all times; (3) if you observe leaking fuel; or (4) if you observe any condition with the stove system or in the surrounding environment that would make operation of an open flamed device dangerous. Failure to follow these directions can cause an unsafe situation leading to fire, burns, severe injury or death.

WINDBURNER® DUO & GROUP STOVE SYSTEMS INSTRUCTIONS

STOVE PARTS:
- **A. Indicator Wire**
- **B. Burner Screen**
- **C. Burner Rim**
- **D. Mixer Tube**
- **E. Stove Support Legs**
- **F. Flame Adjuster**
- **G. Regulator Valve Assembly**

DUO SYSTEM:
- **H. Pot Lid**
- **I. Fuel Canister**
- **J. PackTowl**
- **K. Pot Insulator**
- **L. Pot**
- **M. Pot Insulator Handle**
- **N. Base Cup**

GROUP SYSTEM:
- **O. Pot Handle**
- **P. Pot Lid**
- **Q. Fuel Canister**
- **R. PackTowl**
- **S. Pot**

1. SET UP STOVE 1. Clear cooking area of combustible materials and flammable liquids or vapors. 2. Slide out Stove Support Legs (E) to deploy spring release. 3. Place stove assembly on a solid, stable, even surface.

⚠ DANGER Keep combustibles at least 4 feet (1.2 meters) away from the top and sides of a burning stove, or a stove that you are in the process of lighting. Keep flammable liquids and vapors at least 25 feet (7.6 meters) away from the top and sides of a burning stove, or a stove that you are in the process of lighting. This stove can ignite nearby combustible materials, flammable liquid and vapors, creating a situation where fire, burns, severe injury, or death can result.

Never attempt to light stove if Flame Adjuster is left open. If Flame Adjuster is left open, close it immediately and thoroughly ventilate area before lighting stove. Failure to ventilate area can result in an explosion that can cause fire, burns, severe injury, or death.

2. CONNECT STOVE AND CANISTER 1. Close Flame Adjuster (F). Turn Flame Adjuster clockwise. **2. Finger-tighten valve onto top of the canister until connection is secure. Avoid twisting or kinking the flexible hose.**

⚠ DANGER Never overtighten stove onto canister. Overtightening may damage stove or fuel canister, causing fuel to leak. Leaking fuel can cause fire, burns, severe injury or death.

Use extreme caution when using stove in temperatures below freezing. In freezing temperatures O-rings can stiffen and leak fuel. Always check for fuel leaks before and after lighting stove. Use of a leaking stove can cause fire, burns, severe injury or death.

Keep children away from stove and fuel. Cascade Designs, Inc. recommends no less than 10 feet (~ 3 meters). Never leave a burning or hot stove unattended. An unattended stove can lead to fire and/or a situation where children, pets, or the unwary can be burned, injured, or killed.

3. TURN STOVE ON 1. Hold lit match or lighter over top of Burner Screen (B). DO NOT attempt to light stove through the Mixer Tube (D). 2. Open Flame Adjuster until fuel begins to flow. Turn Flame Adjuster counterclockwise about 2 full turns. **3. Check for burner ignition.** A blue flame may be seen before the burner begins glowing. Once the burner mesh (B) or Ignition Indicator Wire (A) glows, or heat emanates from the burner, the burner is ready to use. If fuel does not ignite within 10 seconds, close the Flame Adjuster, wait 15 seconds, and repeat substeps 1-3 above.

⚠ DANGER Carefully follow all instructions when attempting to light stove. Never attempt to light stove through the Mixer Tube or with cookware in place. Attempting to light stove other than specified may cause stove to overheat, creating a situation where fire, burns, severe injury or death can result. If stove becomes inoperable, immediately discontinue use and return stove to an authorized MSR dealer. Never place your head or body above stove while lighting or cooking. Placement of head or body above stove is an unsafe practice that can cause fire, burns, severe injury or death.

4. USE STOVE TO COOK 1. Add food or liquid to Pot. Never exceed MAX. FILL (inside Pot). **2. Place Pot onto stove by aligning it with Burner Rim (C). 3. Turn Flame Adjuster to adjust heat.**

⚠ DANGER Never move a burning or hot stove. Always extinguish stove and cool for at least 5 minutes before moving. Moving a burning or hot stove can cause fire, burns, severe injury or death. Never place and operate two or more stoves together. Never operate stove with empty or dry cookware. Never use non-WindBurner cookware, reflectors, or diffusers. Misuse of stove can result in the fuel canister exploding and causing fire, burns, severe injury or death.

5. TURN OFF STOVE 1. Close Flame Adjuster Valve when done cooking. Turn clockwise about 2.5 full turns until full stop. **2. After extinguishing the stove, wait until the Pot and its contents have cooled to a comfortable temperature before eating or drinking.** NOTE: To remove Insulator from Duo Pot for cleaning, pull latch away from pot and slide insulator down to remove.

6. PACK UP SYSTEM 1. After Burner Screen stops glowing, wait 5 minutes for stove to cool. 2. Move stove assembly away from any ignition sources and unscrew canister. A small amount of gas may escape when unscrewing stove. **3. Press and slide in stove legs to store. 4. *Duo System:* Place PackTowl® in bottom of Pot and then canister upside down, then stove upside down. Place lid on Pot. Slide Base Cup onto bottom of Pot. *Group System:* Place PackTowl in bottom of Pot, then the canister, followed by the stove, right side up. For best fit, orient the stove so its fuel line points counterclockwise. (The stove's lip will rest on top of the canister.) Place lid on Pot. Fold handle on top of lid.** NOTE: Ensure stove assembly and PackTowl are dry before long-term storage. Corrosion can occur when stored wet.

⚠ DANGER Always disconnect stove from fuel canister before storing. Failure to disconnect stove from canister before storing may cause fuel to leak and cause fire, burns, severe injury or death. Always store fuel canisters in a well-ventilated location away from any possible heat or ignition source, such as water heaters, stoves, pilot lights, or furnaces, or where temperatures exceed 120 F (49 C). Storing fuel canisters near any heat or ignition source or in temperatures exceeding 120 F (49 C) can result in the canister exploding and causing fire, burns, severe injury or death.

Stove service must only be done by an individual authorized by Cascade Designs, Inc. If you have any questions about these instructions, your stove, replacement parts, or repairs, please contact Cascade Designs.

Limited Warranty details at msrgear.com/warranty
For Troubleshooting Solutions, visit:
msrgear.com/windburner-duo
msrgear.com/windburner-group